QUICKGRIP

INDUSTRIAL PLUG AND CONNECTOR DESIGN

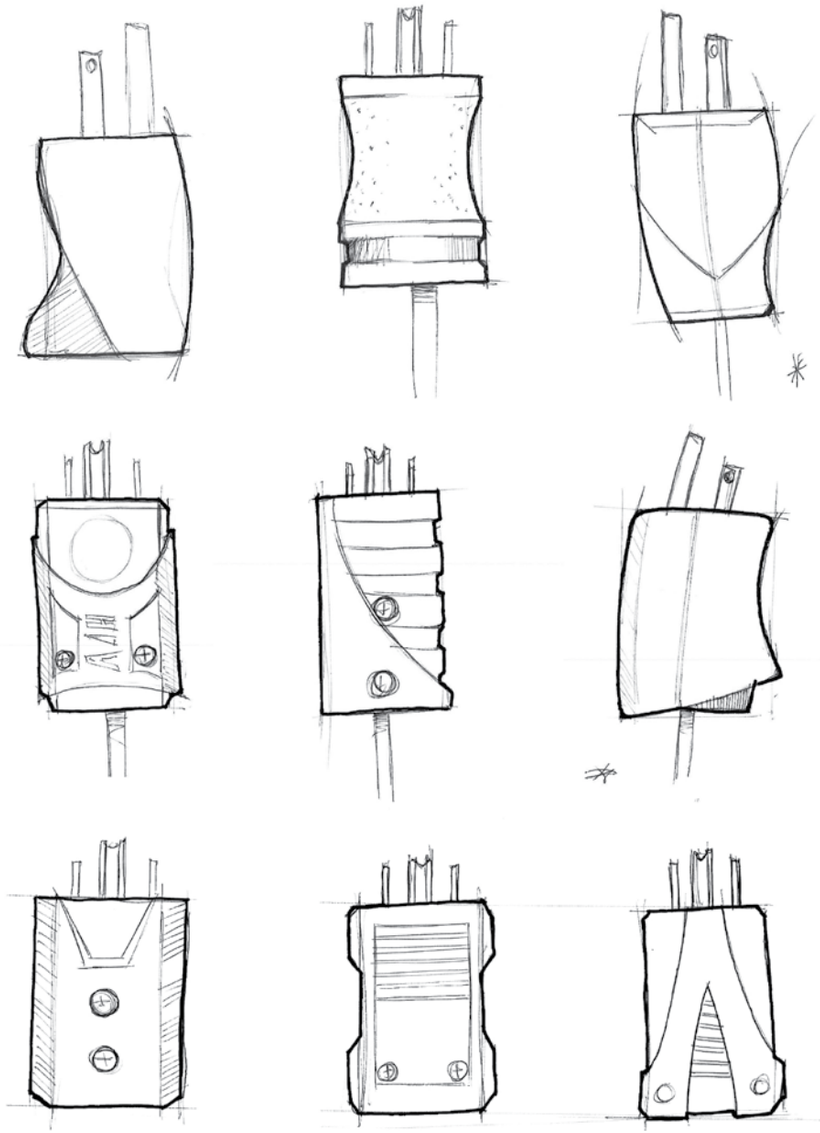

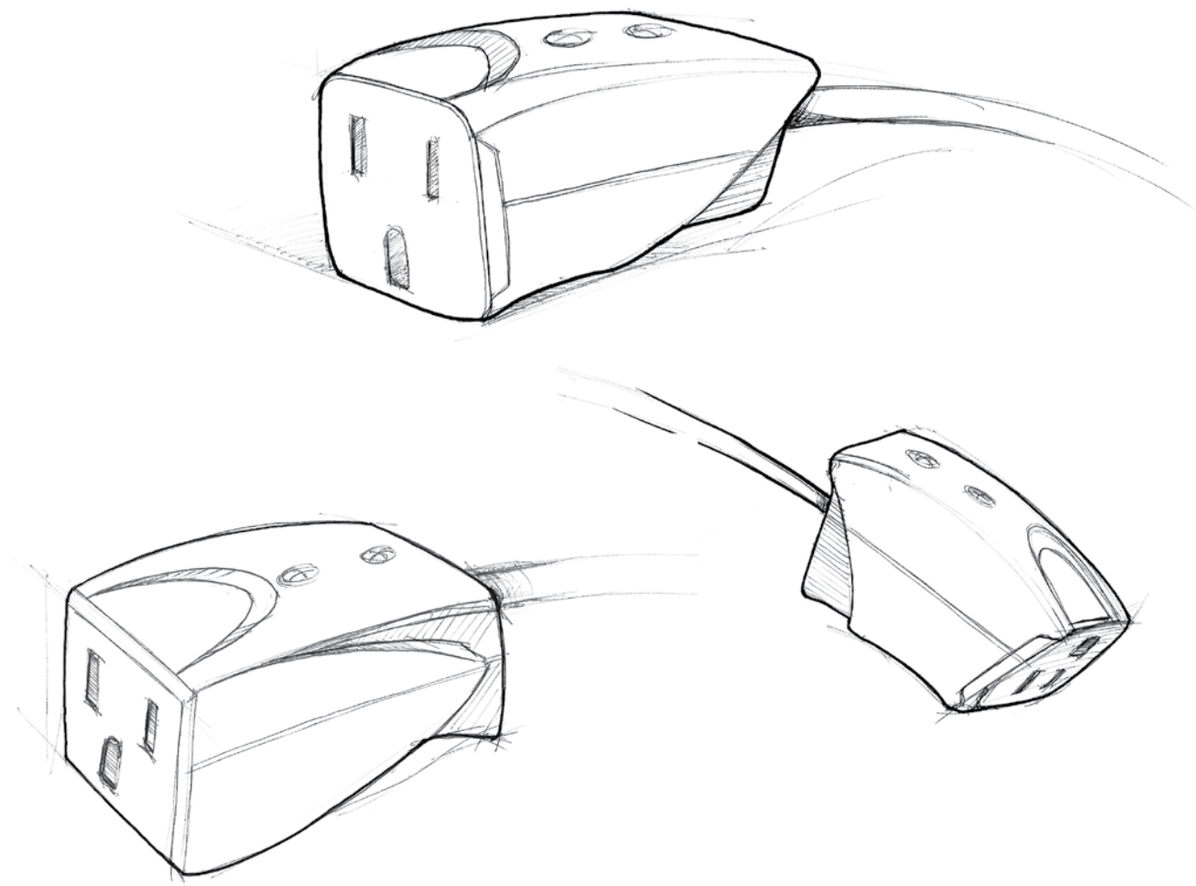

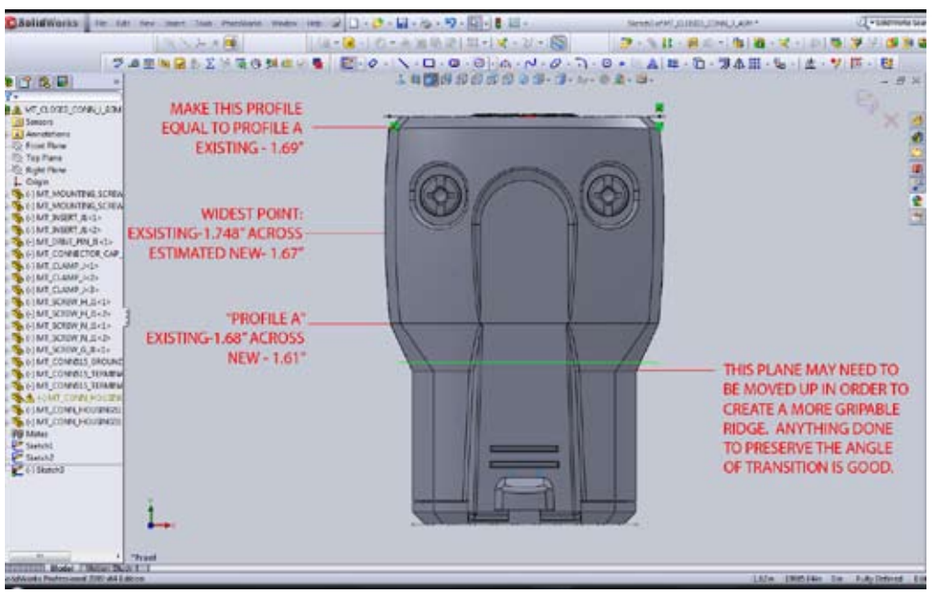
MAKE THIS PROFILE
EQUAL TO PROFILE A
EXISTING - 1.69"
WIDEST POINT:
EXSISTING-1.748" ACROSS
ESTIMATED NEW- 1.67"
"PROFILE A"
EXISTING-1.68" ACROSS
NEW - 1.61"
THIS PLANE MAY NEED TO
BE MOVED UP IN ORDER TO
CREATE A MORE GRIPABLE
RIDGE. ANYTHING DONE
TO PRESERVE THE ANGLE
OF TRANSITION IS GOOD.

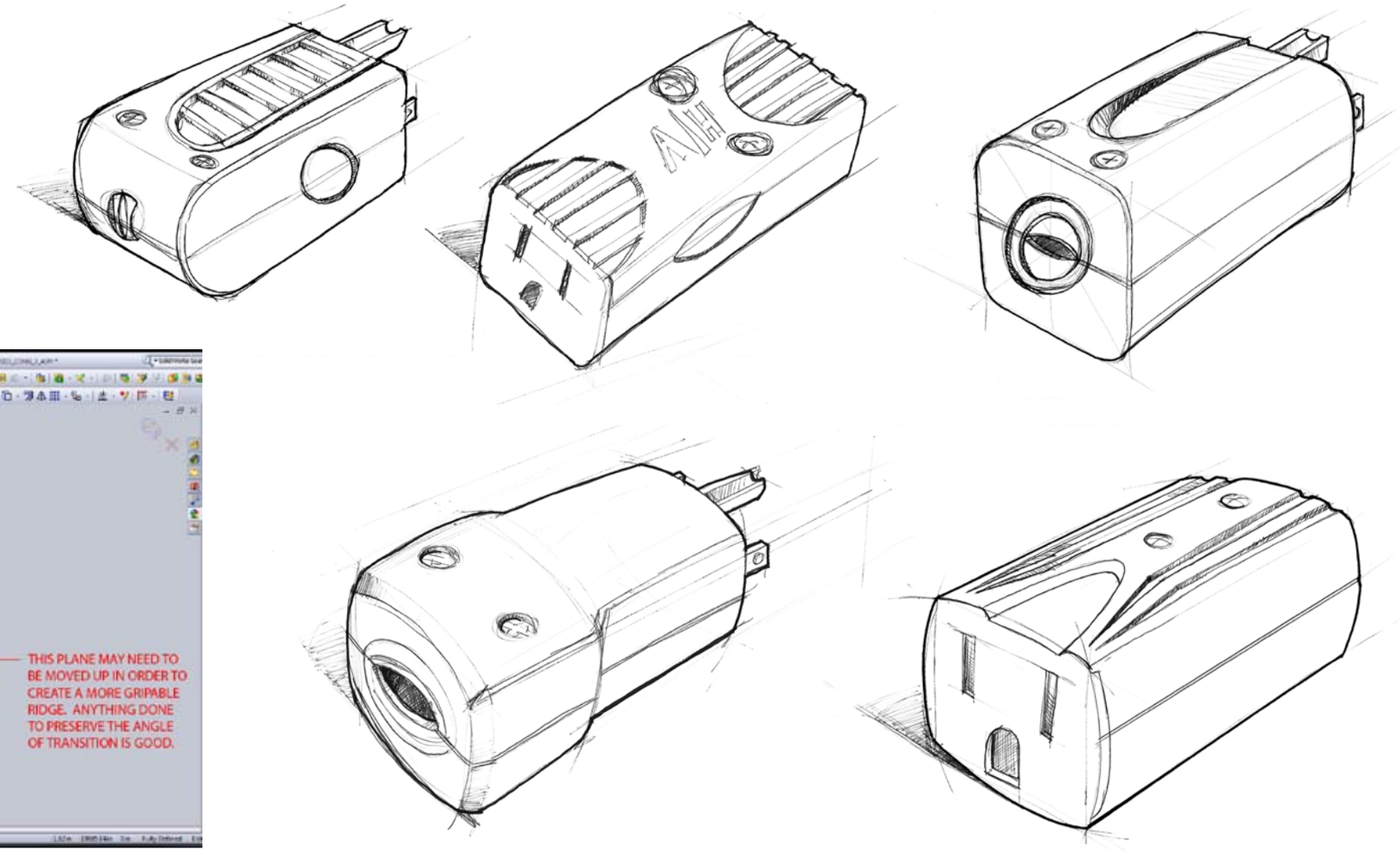

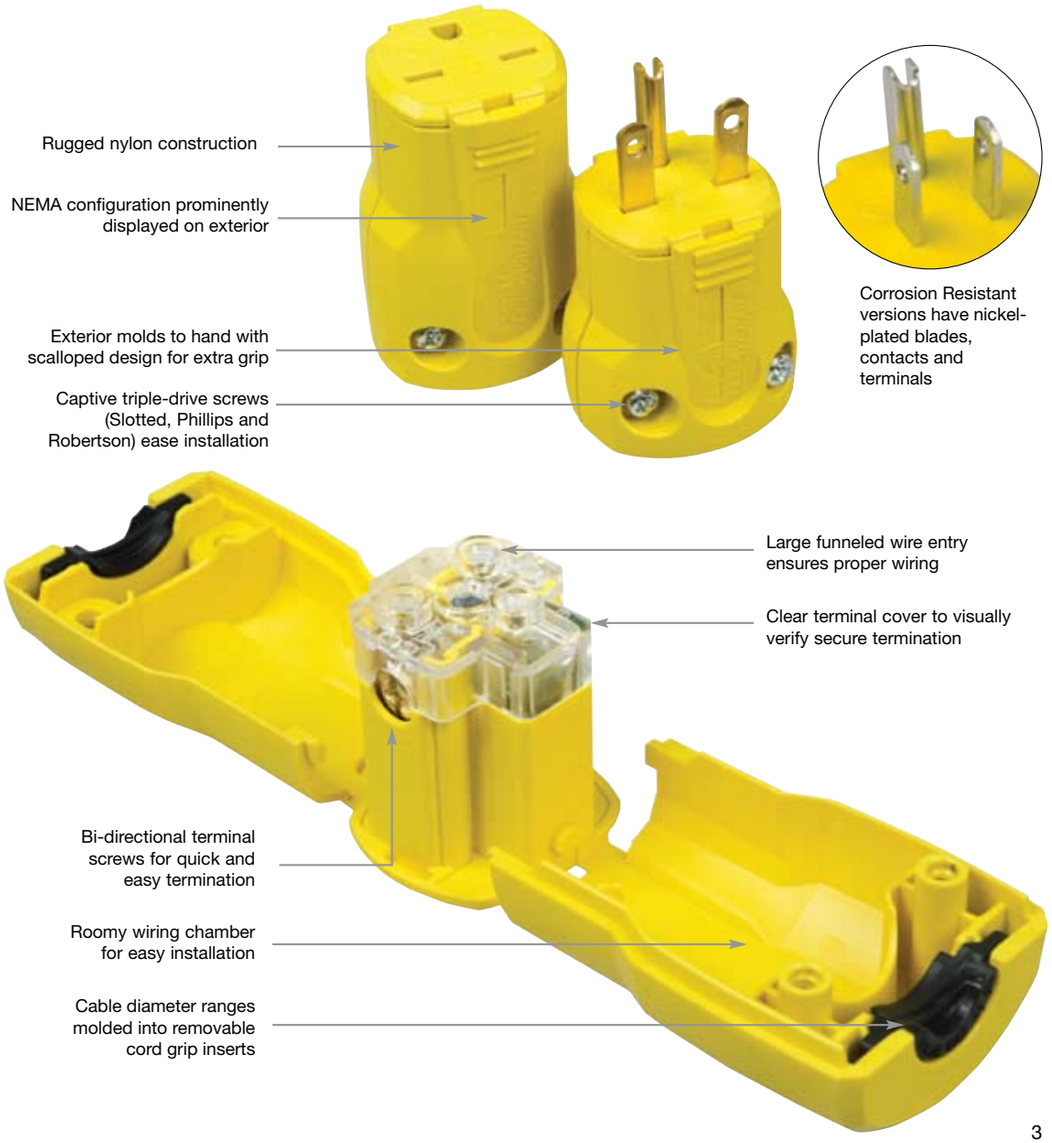
Rugged nylon construction
NEMA configuration prominently displayed on exterior
Exterior molds to hand with scalloped design for extra grip
Captive triple-drive screws (Slotted, Phillips and Robertson) ease installation
Corrosion Resistant versions have nickel-plated blades, contacts and terminals
Large funneled wire entry ensures proper wiring
Clear terminal cover to visually verify secure termination
Bi-directional terminal screws for quick and easy termination
Roomy wiring chamber for easy installation
Cable diameter ranges molded into removable cord grip inserts

1
2
3
4
7
5
6
8
9
10
11
12
13
14
15
16
17
18
19
20
21
23
24
25
150